MANUAL
ELECTRIC WALL MOUNT
HEIGHT ADJUSTABLE

ST-SUP-MUR-ELE-006

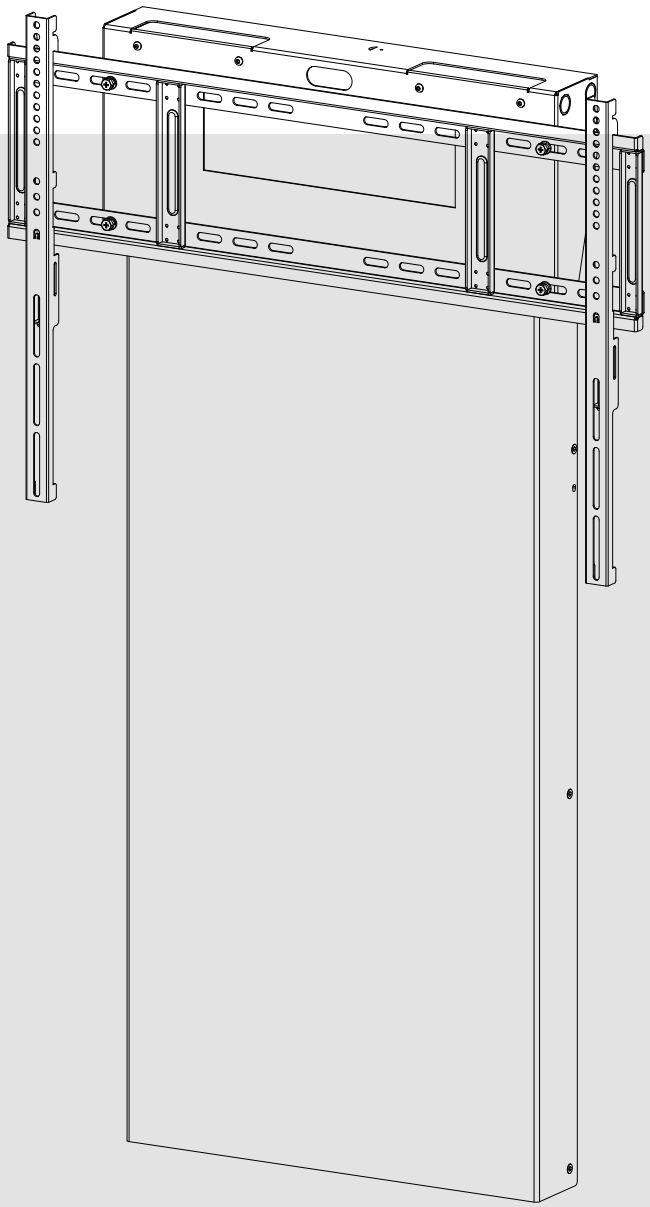

speechi

12/04/2026 - ST-SUP-MUR-ELE-006-MAN

Safety Information

Important safety instructions for installers and users

Installer:
Before starting the installation, carefully read these safety instructions and the product manual.
Failure to read, understand, and follow all instructions may result in serious personal injury and damage to equipment.

User:
Please read the following safety information and the user manual (if provided) carefully before using the product to ensure safe and reliable operation.

Electrical Safety

Connect the unit only to a properly grounded power outlet. Ensure that the power plug remains easily accessible for quick disconnection.
Use the unit in dry indoor environments only. Protect it from water and other liquids. Clean the unit with a dry cloth only.
Do not disassemble the unit. RISK OF ELECTRIC SHOCK. There are no user-serviceable parts inside.
In case of malfunction, unplug the unit and contact an authorized service technician.
Do not overload or damage the power cables. Replace any damaged cables immediately with identical ones.
Always disconnect the power cable before moving the product.
The unit is not protected against dripping or splashing water. Do not place liquid-filled objects on or near the unit.
To reduce the risk of electric shock, always unplug the unit before cleaning.

Mechanical Safety

Keep the movement area of the product free from obstacles at all times.
Before moving the unit up or down, ensure a minimum safety distance of 20 cm (7.9 inches) from any surrounding objects to prevent collisions.
In case of any abnormal situation, stop operation immediately.
Use the unit only on flat and stable surfaces.
There is a risk of tipping when moving over thresholds or uneven floors.
Serious injury may occur if the unit tips over.
Always move the product with the display in the lowest position.
Do not push the electric stand from the front or back.
Do not move the unit by pushing on the display.
Keep hands and other body parts away from moving components.
Exceeding the maximum load capacity may result in serious injury or equipment damage.
It is the installer's responsibility to ensure that the total weight, including accessories, does not exceed 120 kg. Using heavier displays may cause instability and lead to tipping, resulting in severe or fatal injury.
The height adjustment function may not operate properly if the maximum load is exceeded.
Installation, maintenance, and removal of the product must be carried out by qualified personnel.

Intended Use

This product is designed for mounting and height adjustment of large-format passive or interactive displays.
It is intended for indoor use in environments such as classrooms, offices, or meeting rooms, at temperatures between 0°C and 40°C. The environment must be dry and well-ventilated. Operating humidity: 10%–90% RH.
Do not use the product outdoors.
This product is intended for use by adults. Children under 16 must use it only under adult supervision.

Duty Cycle

Duty cycle: 2 minutes ON / 18 minutes OFF.
The electric stand motors are designed for intermittent use. Continuous operation (more than 2 minutes) may cause overheating, triggering automatic shutdown.
If overheating occurs, allow the motors to cool down for at least 18 minutes before resuming operation.
The system will automatically return to normal operation once the motors have cooled.

Anti-Collision Function

The product will stop and automatically move up by 50 mm if an obstacle is detected during downward movement.
It will automatically stop if an obstacle is detected during upward movement.

Parts List

Product Specifications
· IFP Dimensions: 55 - 86 inch
· Max Load: 120 kg
· Max. Stroke: 675mm
· Max. VESA 800×600mm

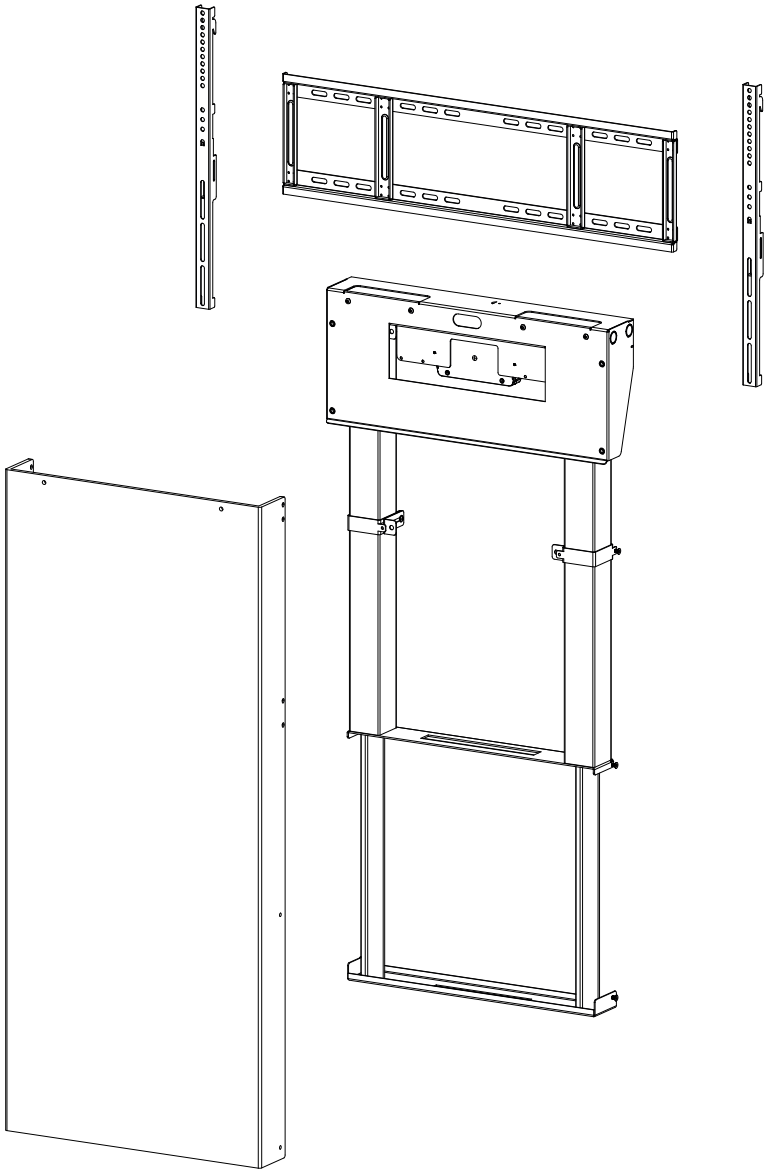

Screw Package

Specification	Quantity	Picture	SN
Hex-4#	1 PCS		a
M8×25	8 PCS		b
KM6×16	10 PCS		c
7×56	6 PCS		d
10×50	6 PCS		e
M6×130	2 PCS		f

Self-Prepared Tools

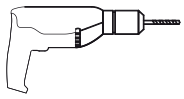
Rotary Hammer-φ10

Marker Pen


Level

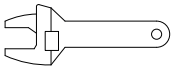
Adjustable Wrench


PH2

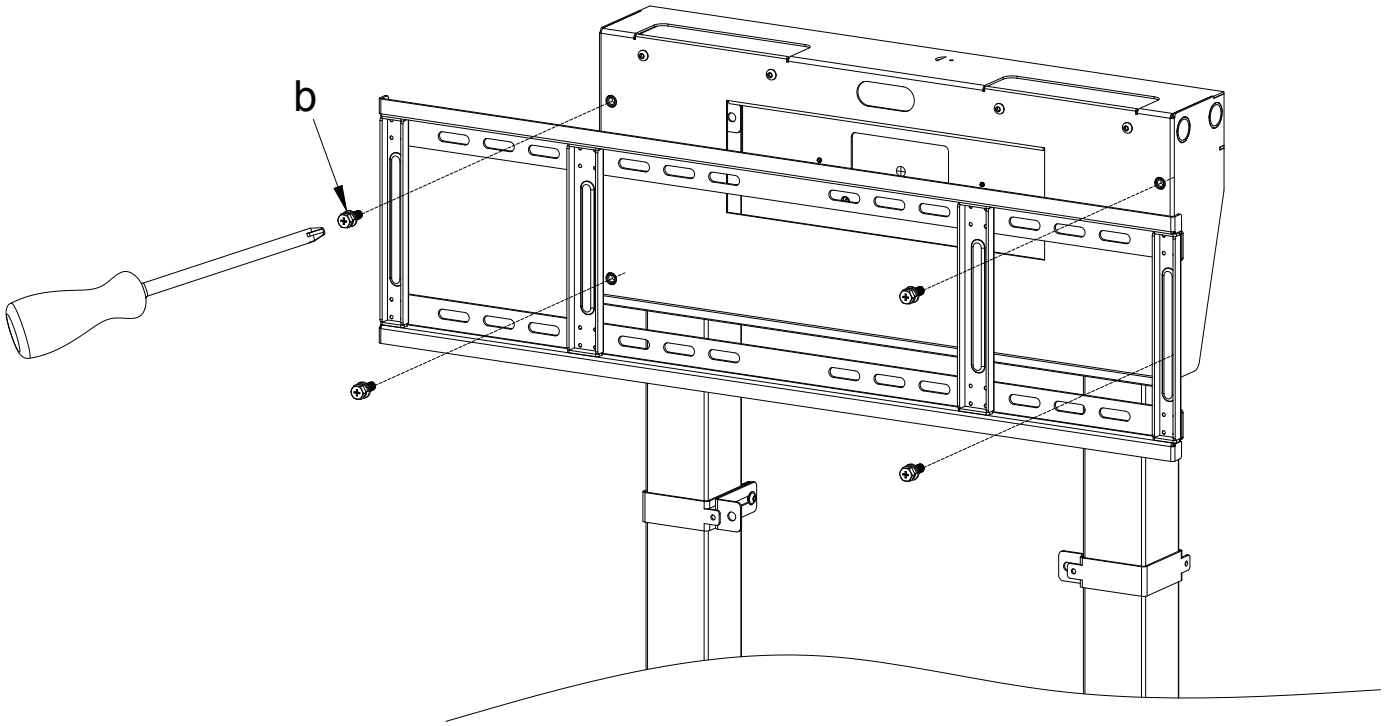

Insert the hand controller/USB cable/IPF power cable into the hole.

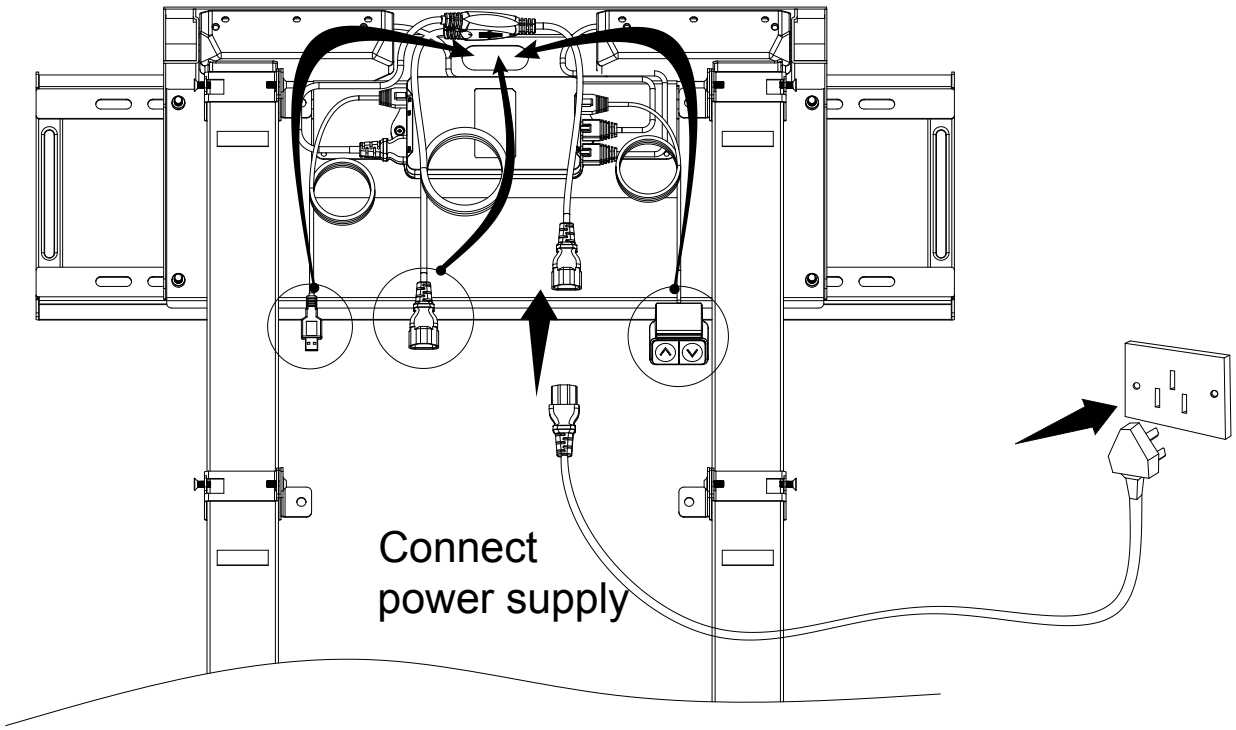

Raise the bracket using the hand controller to expose the top wall-mounted locking bracket.

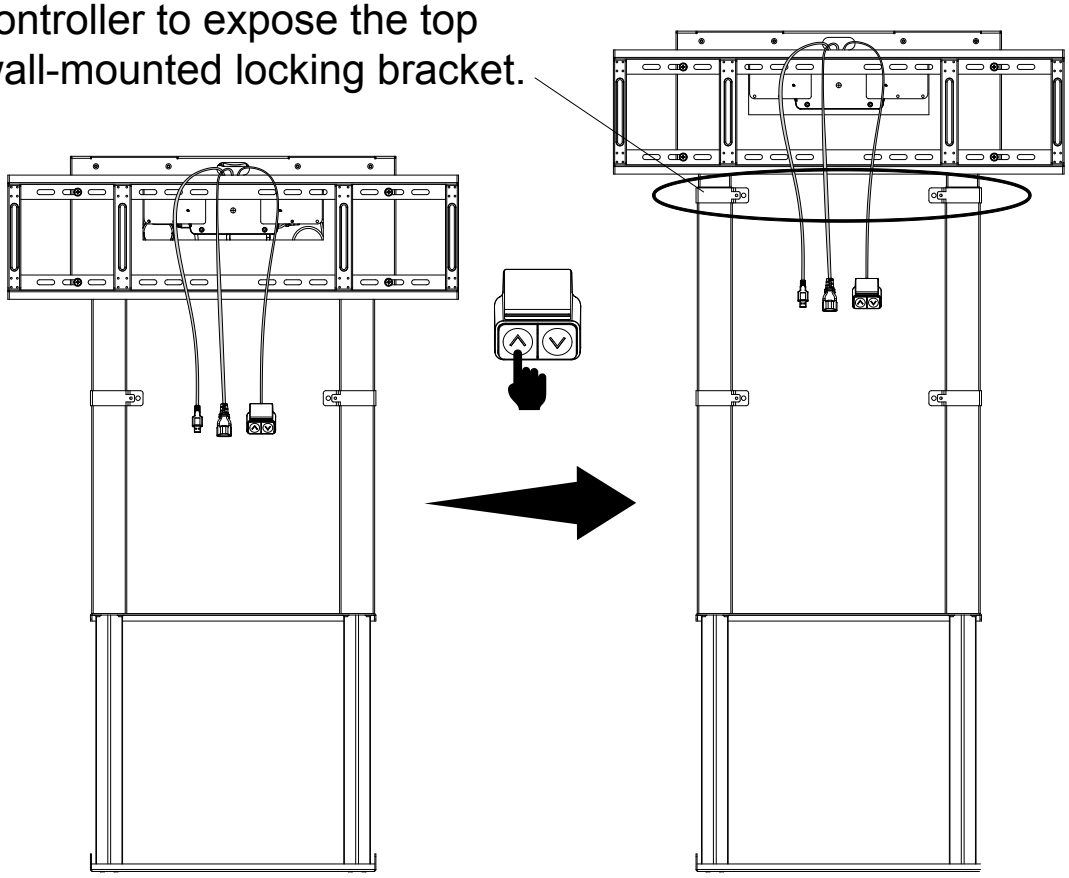

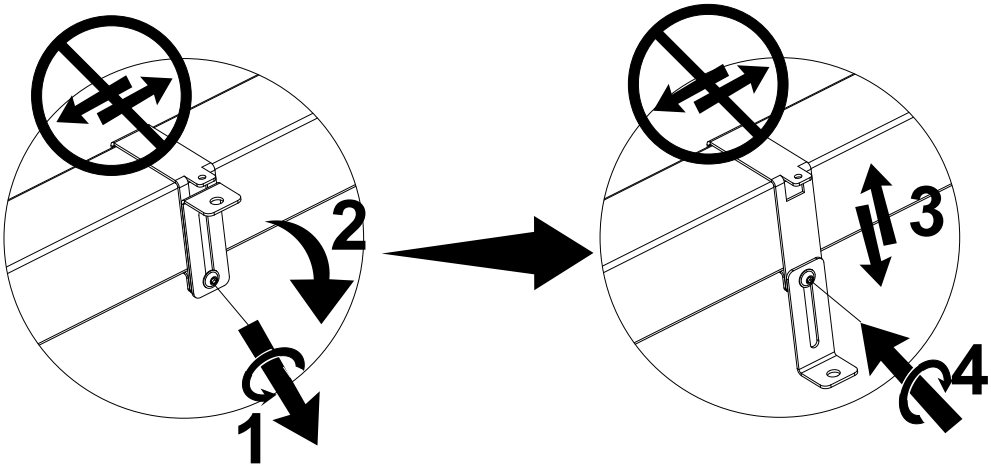

Loosen the screws, adjust the bracket angle, then set the bracket height.

Do not move the bracket, otherwise it will cause it to misalign with the felt board.

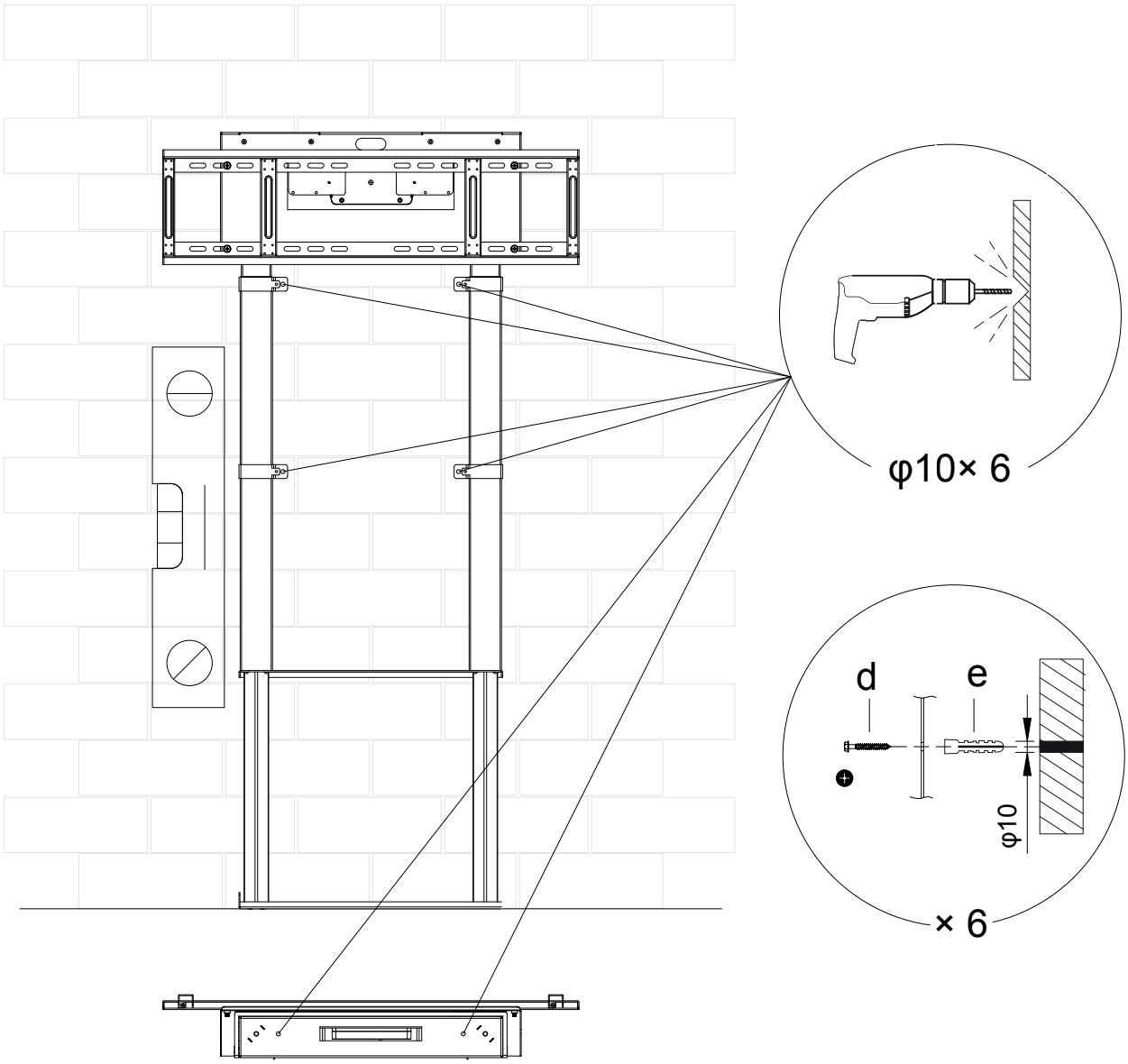

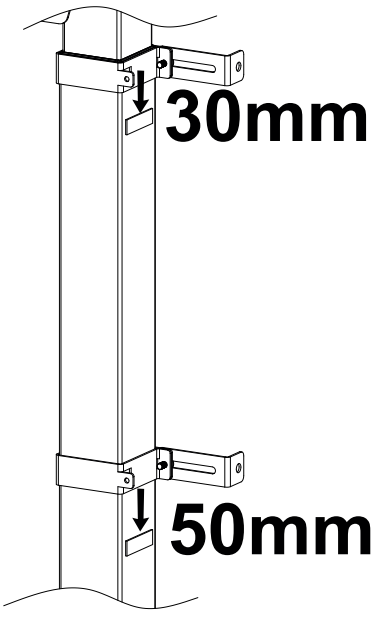

If any obstruction is encountered when securing the wall bracket, lower the bracket by one notch until it sits close to the EVA foam.

When installing the felt board, route the hand controller, USB cable, and IFP power cord to the front of the felt board.

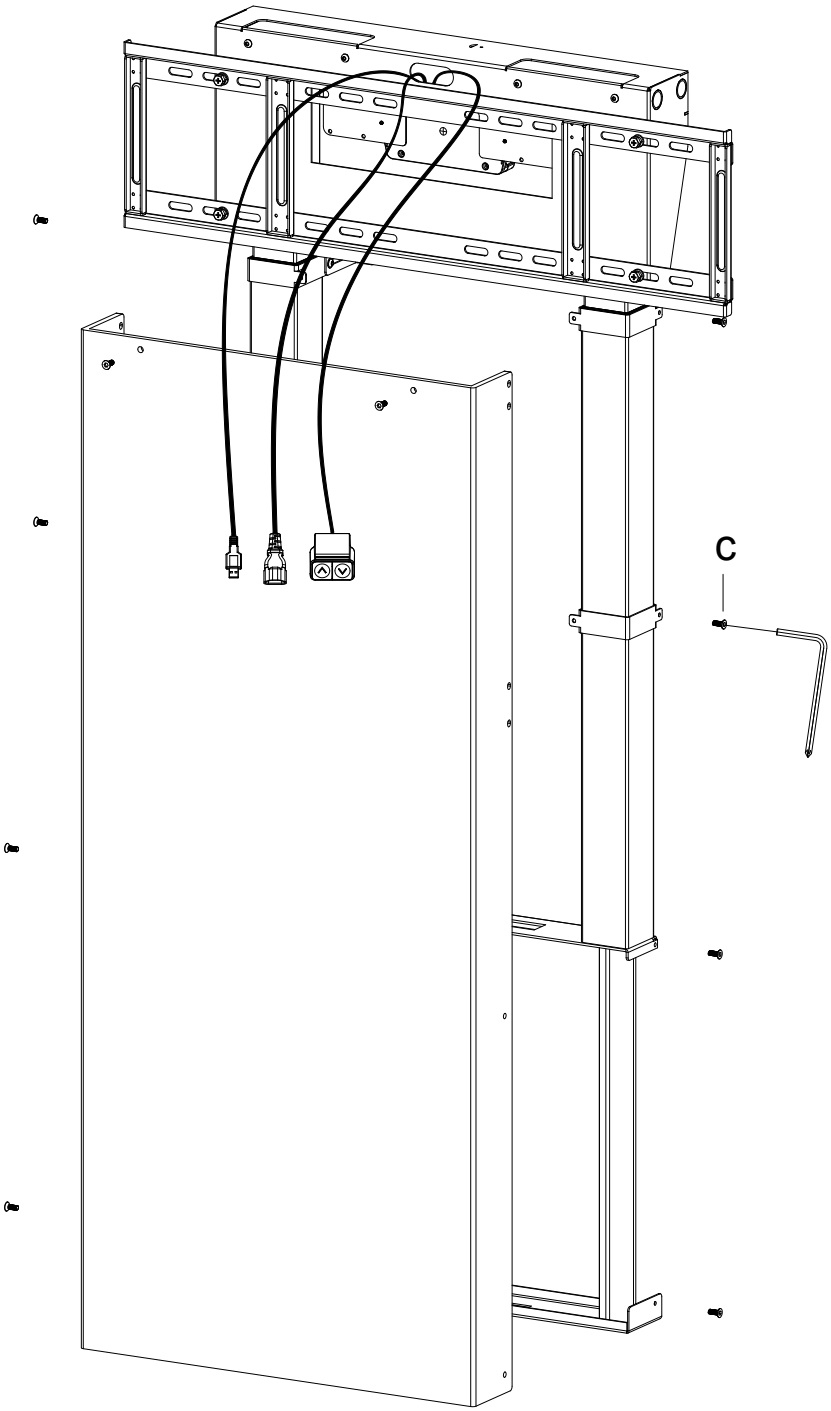

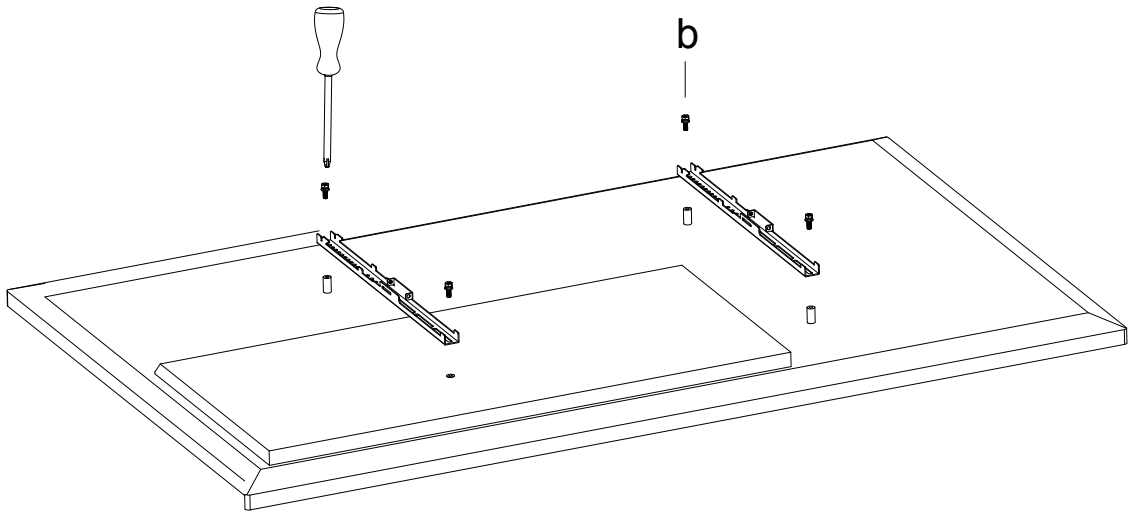

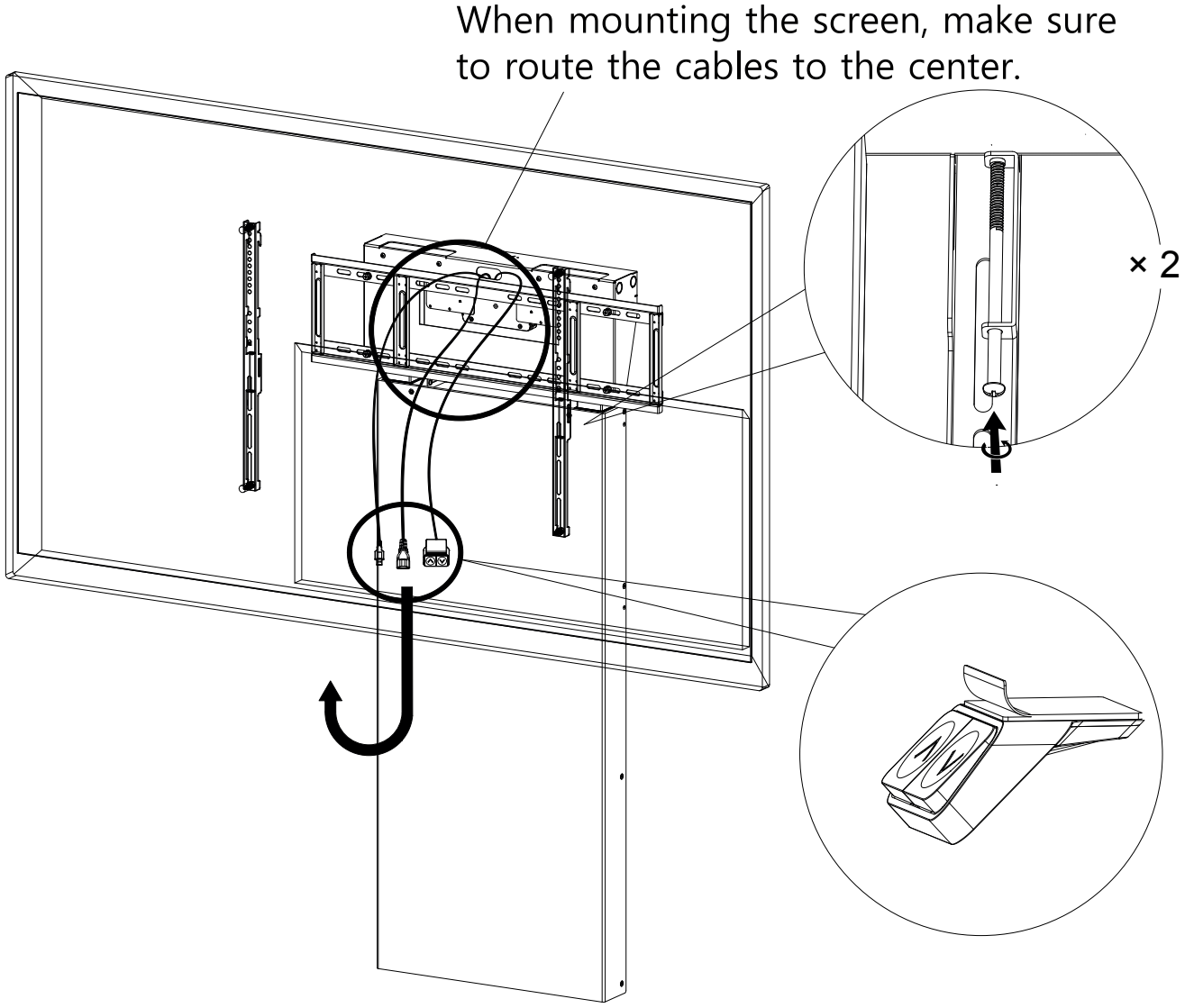

- Connect the power cable to the IFP for power supply.
- Connect the USB cable to the IFP.
- Attach the hand controller to the underside of the IFP.

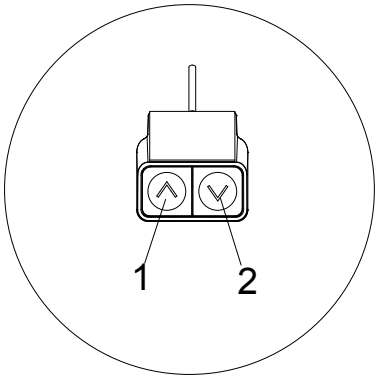

NO.	Items	Function description
1	Up	Control the rise of the Eectric Stand.
2	Down	Control the fall of the Electric Stand.

When using it for the first time, you need to press the down button 5s to reset.
After the reset starts, the column automatically drops to the lowest point and then automatically rebounds 7mm, which means reset success.
If it falls to the bottom and bounces 50mm, it needs to be forced to reset. Press and hold the down button for 10S(after falling to the bottom and rebounding 50mm, keep pressing the down button for 5S to reset,when descending to the buttom and rebound 7mm, the reset is complete).

The power consumption of the product in standby less than 0.5W.
The period after which the equipment reaches automatically standby mode in 2 minutes.